CONTACT US 1-866-548-9274
info@easykitchenhood.com

HOOD INFORMATION – JOB#5038495

HOOD NO	TAG	MODEL	MANUFACTURER	LENGTH	MAX COOKING TEMP	TYPE	APPLIANCE DUTY	DESIGN CFM/FT	TOTAL EXH CFM	EXHAUST PLENUM RISER(S) WIDTH	LENG	HEIGHT	DIA	CFM	VEL	SP	TOTAL SUPPLY CFM	HOOD CONSTRUCTION	HOOD CONFIG END TO END	ROW
1		4824 VX-2-PSP-F	VENTILATION DIRECT	4' 0"	600 DEG	I	HEAVY	275	1100			4"	10"	1100	2017	-0.411"	880	430 SS WHERE EXPOSED	ALONE	ALONE
2		4824 VX-2-PSP-F	VENTILATION DIRECT	6' 0"	600 DEG	I	HEAVY	275	1650			4"	12"	1650	2101	-0.476"	1320	430 SS WHERE EXPOSED	ALONE	ALONE
3		4824 VX-2-PSP-F	VENTILATION DIRECT	8' 0"	600 DEG	I	HEAVY	275	2200			4"	14"	2200	2058	-0.521"	1760	430 SS WHERE EXPOSED	ALONE	ALONE
4		4812 VSX-2-PSP-F	VENTILATION DIRECT	4' 0"	600 DEG	I	HEAVY	294	1176			4"	12"	1176	1497	-0.344"	940	430 SS WHERE EXPOSED	ALONE	ALONE
5		4812 VSX-2-PSP-F	VENTILATION DIRECT	6' 0"	600 DEG	I	HEAVY	294	1764			4"	14"	1764	1650	-0.410"	1411	430 SS WHERE EXPOSED	ALONE	ALONE
6		4812 VSX-2-PSP-F	VENTILATION DIRECT	8' 0"	600 DEG	I	HEAVY	294	2352			4"	16"	2352	1684	-0.449"	1882	430 SS WHERE EXPOSED	ALONE	ALONE

HOOD INFORMATION

HOOD NO	TAG	FILTER(S) TYPE	QTY	HEIGHT	LENGTH	EFFICIENCY @ 7 MICRONS	LIGHT(S) QTY	TYPE	WIRE GUARD	UTILITY CABINET(S) LOCATION	SIZE	FIRE SYSTEM TYPE	SIZE	ELECTRICAL MODEL #	SWITCHES QUANTITY	FIRE SYSTEM PIPING	HOOD HANGING WEIGHT
1		SS BAFFLE WITH HANDLES	2	20"	20"	30%	2	L55 SERIES E26	NO							NO	248 LBS
2		SS BAFFLE WITH HANDLES	4	20"	16"	30%	2	L55 SERIES E26	NO							NO	343 LBS
3		SS BAFFLE WITH HANDLES	5	20"	16"	30%	3	L55 SERIES E26	NO							NO	401 LBS
4		SS BAFFLE WITH HANDLES	2	20"	20"	30%	2	L55 SERIES E26	NO							NO	231 LBS
5		SS BAFFLE WITH HANDLES	4	20"	16"	30%	2	L55 SERIES E26	NO							NO	320 LBS
6		SS BAFFLE WITH HANDLES	5	20"	16"	30%	3	L55 SERIES E26	NO							NO	372 LBS

PERFORATED SUPPLY PLENUM(S)

HOOD NO	TAG	POS	LENGTH	WIDTH	HEIGHT	TYPE	RISER(S) WIDTH	LENG	DIA	CFM	SP
1		Front	48"	18"	6"	MUA	12"	16"		440	0.136"
						MUA	12"	16"		440	0.136"
2		Front	72"	18"	6"	MUA	12"	28"		660	0.166"
						MUA	12"	28"		660	0.166"
3		Front	96"	18"	6"	MUA	12"	24"		586	0.155"
						MUA	12"	24"		586	0.155"
						MUA	12"	24"		586	0.155"
4		Front	48"	18"	6"	MUA	12"	16"		470	0.154"
						MUA	12"	16"		470	0.154"
5		Front	72"	18"	6"	MUA	12"	28"		705	0.188"
						MUA	12"	28"		705	0.188"
6		Front	96"	18"	6"	MUA	12"	24"		627	0.176"
						MUA	12"	24"		627	0.176"
						MUA	12"	24"		627	0.176"

EASY Kitchen Hood

LOCATION , 0	
DATE 8/18/2021	JOB # 5038595
DWG # 1	DRAWN BY
REV.	SCALE 3/8" = 1'-0"

GREASE DUCT & CHIMNEY SPECIFICATIONS:
PROVIDE GREASE DUCT EQUAL TO VENTILATION DIRECT MODEL "VDW" ROUND 20 GAUGE 430 STAINLESS STEEL DUCTWORK. MODEL "VDW" IS LISTED TO UL-1978 AND IS INSTALLED USING "V" CLAMP LOCKING CONNECTIONS SEALED WITH 3M FIRE BARRIER 2000 PLUS. MODEL "VDW" DOES NOT REQUIRE WELDING PROVIDING IT HAS BEEN INSTALLED PER THE MANUFACTURES INSTALLATION GUIDE.
PROVIDE RATED ACCESS DOORS AT EVERY CHANGE IN DIRECTION AND EVERY 12' ON CENTER. PER MANUFACTURES LISTING MODEL "VDW" HORIZONTAL RUNS LESS THAN 75 FT. CAN BE SLOPED 1/16" PER 12", HORIZONTAL RUNS MORE THAN 75 FT. CAN BE SLOPED 3/16" PER 12". DUCT SHOULD BE SLOPED AS MUCH AS POSSIBLE TO REDUCE THE CHANCE OF GREASE ACCUMULATION IN HORIZONTAL RUNS.

IF THE DUCT OR CHIMNEY IS WITHIN 18 INCHES OF COMBUSTIBLE MATERIAL, PROVIDE UL-2221 OR UL-103 HT LISTED DOUBLE WALL GREASE DUCT OR DOUBLE WALL CHIMNEY EQUAL TO VENTILATION DIRECT MODEL "VDW- 2R, 2R TYPE HT, 3R, OR 3Z" ROUND 20 GAUGE 430 STAINLESS INNER DUCT INSULATED WITH A 24 GAUGE 430 STAINLESS OUTER SHELL.

PATENT NUMBERS
AC-PSP (UNITED STATES) - US PATENT 7963830 B2.
AC-PSP WALL (CANADA) - CA PATENT 2820509.
AC-PSP ISLAND (CANADA) - CA PATENT 2520330.

VENTILATION DIRECT RECOMMENDS THE USE OF LISTED, PRE-FABRICATED ROUND GREASE EXHAUST DUCT TO REDUCE STATIC PRESSURE IN THE SYSTEM, MINIMIZE INSTALLATION AND INSPECTION TIMES, AND ENSURE DUCT IS LIQUID TIGHT

HVAC DISTRIBUTION NOTE

HIGH VELOCITY DIFFUSERS OR HVAC RETURNS SHOULD NOT BE PLACED WITHIN TEN (10) FEET OF THE EXHAUST HOOD. PERFORATED DIFFUSERS ARE RECOMMENDED.

VERIFY CEILING HEIGHT

___' - ___"

HEIGHT REQUIRED TO VERIFY THAT HOOD FITS SPACE AND TO SIZE THE ENCLOSURE PANELS

CUSTOMER APPROVAL TO MANUFACTURE:

APPROVED AS NOTED ☐
APPROVED WITH NO EXCEPTION TAKEN ☐
REVISE AND RESUBMIT ☐
SIGNATURE ____________
YOUR TITLE ____________ DATE ____________

EASY Kitchen Hood
LOCATION , 0
DATE 8/18/2021 JOB # 5038595
DWG # 1 DRAWN BY
REV. SCALE 3/8" = 1'-0"

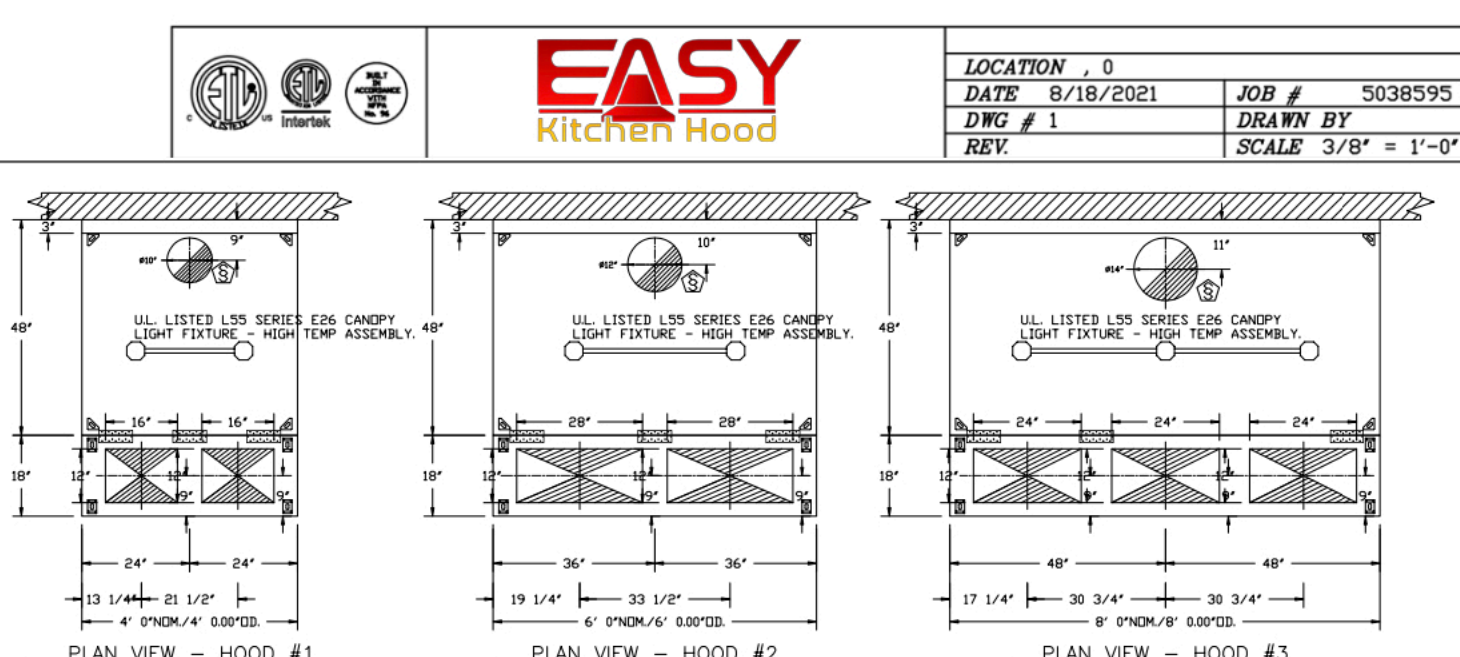

PLAN VIEW – HOOD #1
4' 0.00" LONG 4824VX-2-PSP-F

PLAN VIEW – HOOD #2
6' 0.00" LONG 4824VX-2-PSP-F

PLAN VIEW – HOOD #3
8' 0.00" LONG 4824VX-2-PSP-F

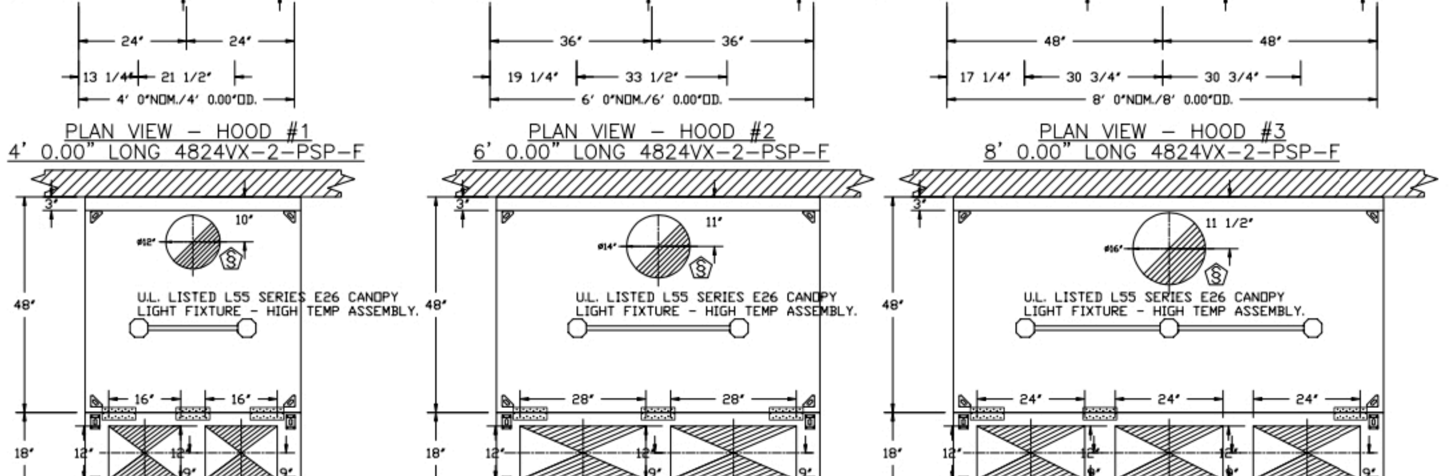

PLAN VIEW – HOOD #4
4' 0.00" LONG 4812VSX-2-PSP-F

PLAN VIEW – HOOD #5
6' 0.00" LONG 4812VSX-2-PSP-F

PLAN VIEW – HOOD #6
8' 0.00" LONG 4812VSX-2-PSP-F

EASY Kitchen Hood
LOCATION , 0
DATE 8/18/2021 JOB # 5038595
DWG # 1 DRAWN BY
REV. SCALE 3/8" = 1'-0"

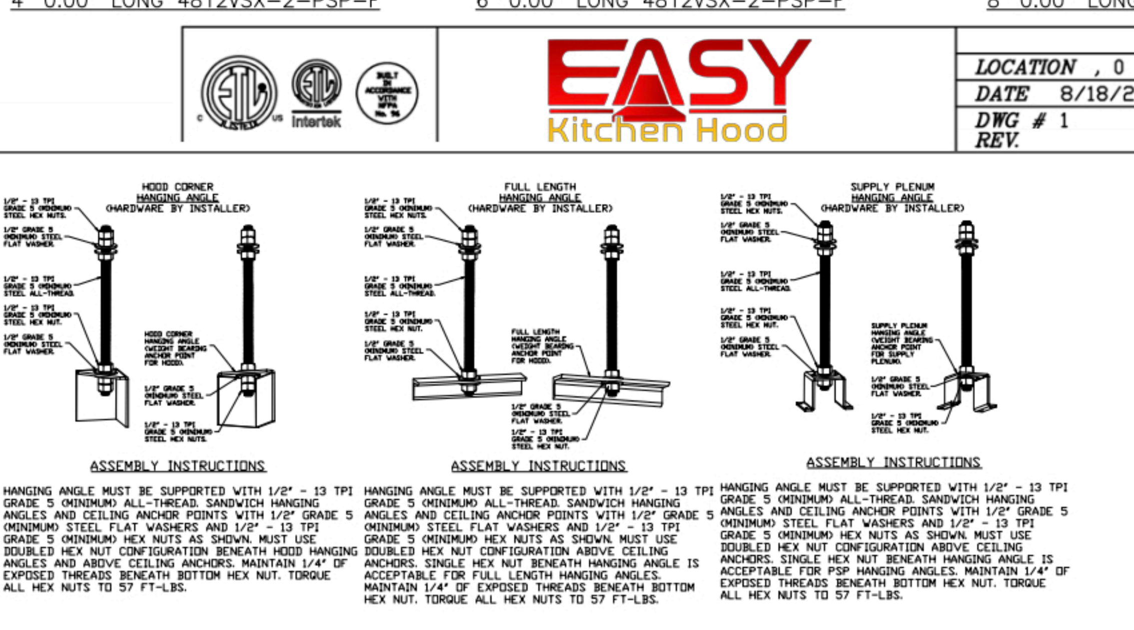

ASSEMBLY INSTRUCTIONS

HANGING ANGLE MUST BE SUPPORTED WITH 1/2" - 13 TPI GRADE 5 (MINIMUM) ALL-THREAD. SANDWICH HANGING ANGLES AND CEILING ANCHOR POINTS WITH 1/2" GRADE 5 (MINIMUM) STEEL FLAT WASHERS AND 1/2" - 13 TPI GRADE 5 (MINIMUM) HEX NUTS AS SHOWN. MUST USE DOUBLED HEX NUT CONFIGURATION BENEATH HOOD HANGING ANGLES AND ABOVE CEILING ANCHORS. MAINTAIN 1/4" OF EXPOSED THREADS BENEATH BOTTOM HEX NUT. TORQUE ALL HEX NUTS TO 57 FT-LBS.

ASSEMBLY INSTRUCTIONS

HANGING ANGLE MUST BE SUPPORTED WITH 1/2" - 13 TPI GRADE 5 (MINIMUM) ALL-THREAD. SANDWICH HANGING ANGLES AND CEILING ANCHOR POINTS WITH 1/2" GRADE 5 (MINIMUM) STEEL FLAT WASHERS AND 1/2" - 13 TPI GRADE 5 (MINIMUM) HEX NUTS AS SHOWN. MUST USE DOUBLED HEX NUT CONFIGURATION ABOVE CEILING ANCHORS. SINGLE HEX NUT BENEATH HANGING ANGLE IS ACCEPTABLE FOR FULL LENGTH HANGING ANGLES. MAINTAIN 1/4" OF EXPOSED THREADS BENEATH BOTTOM HEX NUT. TORQUE ALL HEX NUTS TO 57 FT-LBS.

ASSEMBLY INSTRUCTIONS

HANGING ANGLE MUST BE SUPPORTED WITH 1/2" - 13 TPI GRADE 5 (MINIMUM) ALL-THREAD. SANDWICH HANGING ANGLES AND CEILING ANCHOR POINTS WITH 1/2" GRADE 5 (MINIMUM) STEEL FLAT WASHERS AND 1/2" - 13 TPI GRADE 5 (MINIMUM) HEX NUTS AS SHOWN. MUST USE DOUBLED HEX NUT CONFIGURATION ABOVE CEILING ANCHORS. SINGLE HEX NUT BENEATH HANGING ANGLE IS ACCEPTABLE FOR PSP HANGING ANGLES. MAINTAIN 1/4" OF EXPOSED THREADS BENEATH BOTTOM HEX NUT. TORQUE ALL HEX NUTS TO 57 FT-LBS.

EASY Kitchen Hood
LOCATION , 0
DATE 8/18/2021 JOB # 5038595
DWG # 1 DRAWN BY
REV. SCALE 3/8" = 1'-0"

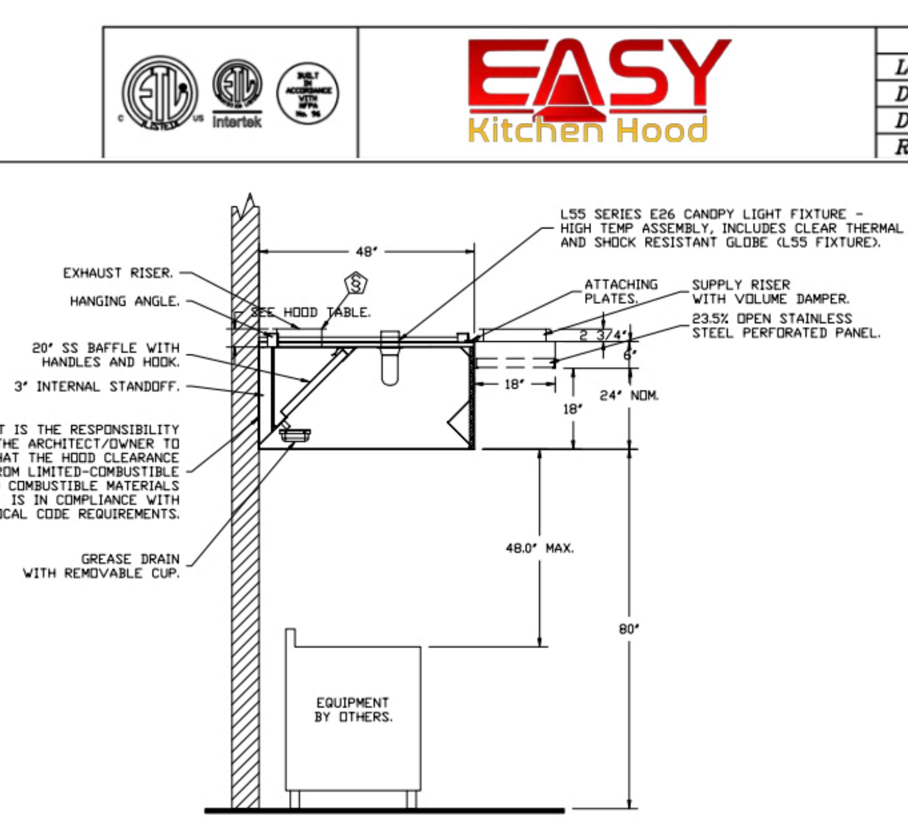

SECTION VIEW – MODEL 4824VX-2-PSP-F
HOOD – #1

EASY Kitchen Hood
LOCATION , 0
DATE 8/18/2021 JOB # 5038595
DWG # 1 DRAWN BY
REV. SCALE 3/8" = 1'-0"

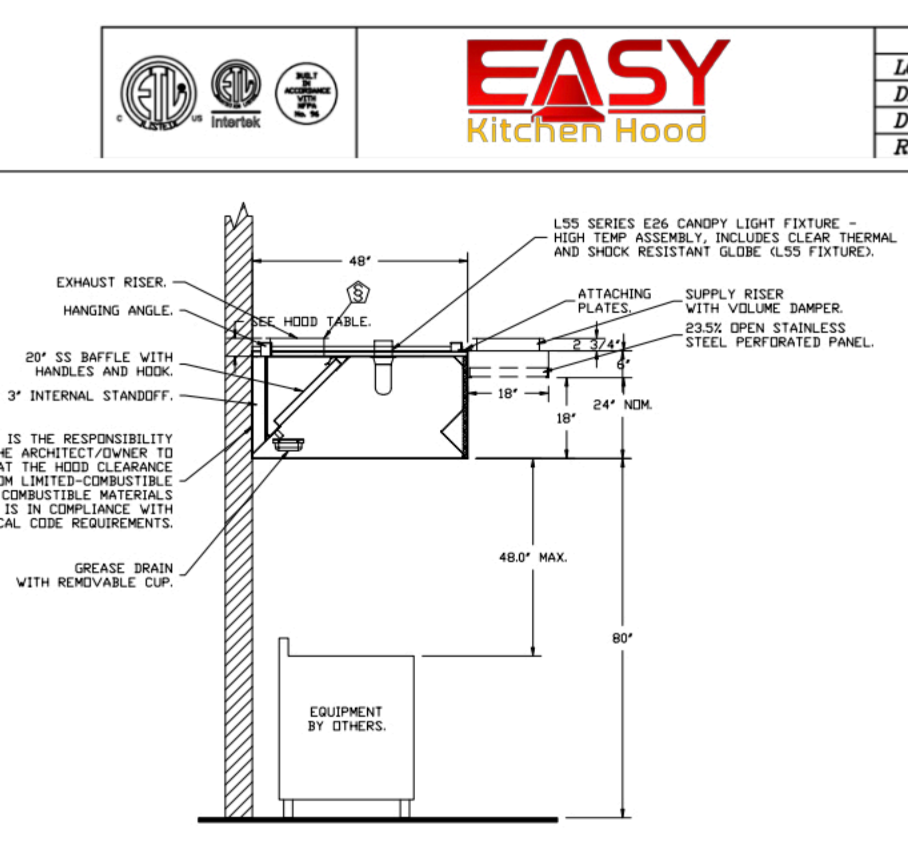

SECTION VIEW – MODEL 4824VX-2-PSP-F
HOOD – #2

EASY Kitchen Hood
LOCATION , 0
DATE 8/18/2021 JOB # 5038595
DWG # 1 DRAWN BY
REV. SCALE 3/8" = 1'-0"

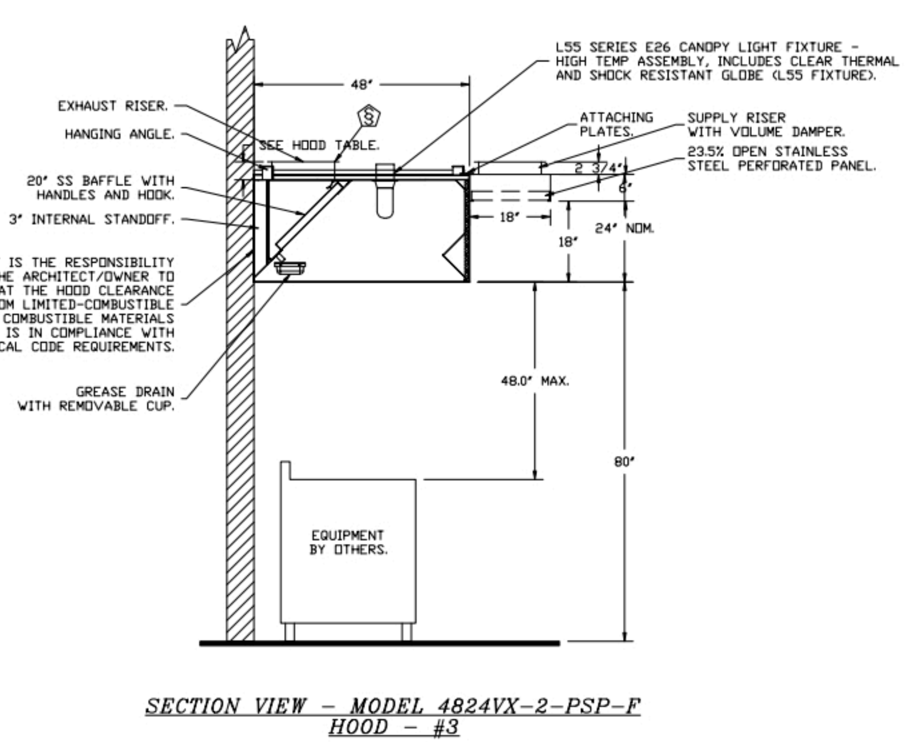

SECTION VIEW – MODEL 4824VX-2-PSP-F
HOOD – #3

EASY Kitchen Hood
LOCATION , 0
DATE 8/18/2021 JOB # 5038595
DWG # 1 DRAWN BY
REV. SCALE 3/8" = 1'-0"

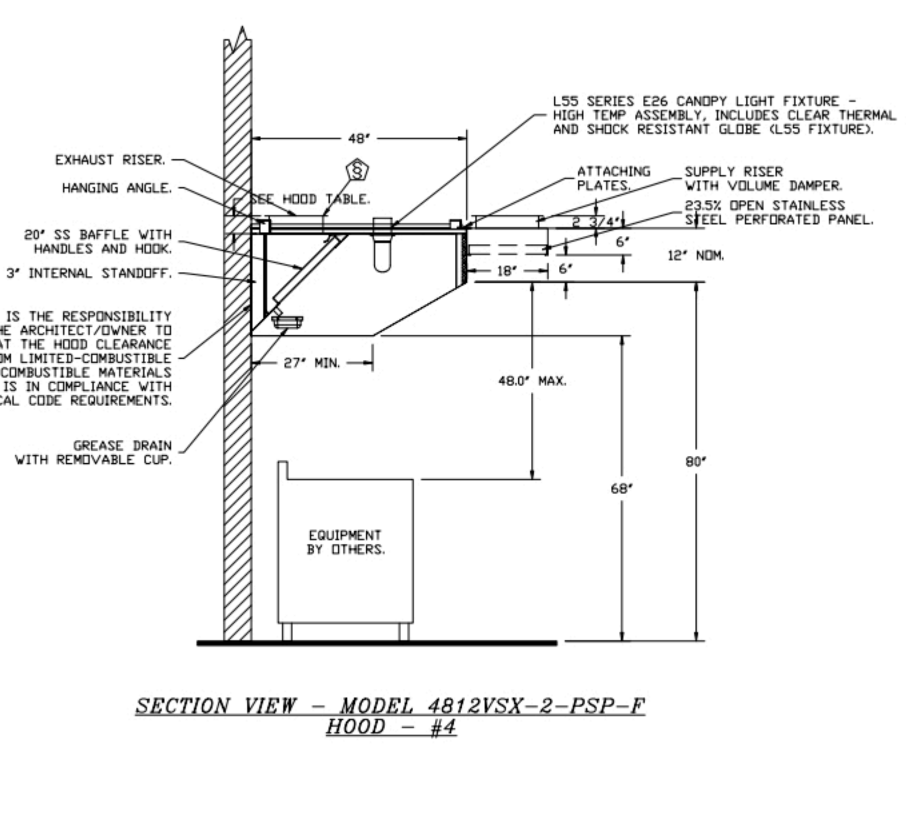

SECTION VIEW – MODEL 4812VSX-2-PSP-F
HOOD – #4

EASY Kitchen Hood
LOCATION , 0
DATE 8/18/2021 JOB # 5038595
DWG # 1 DRAWN BY
REV. SCALE 3/8" = 1'-0"

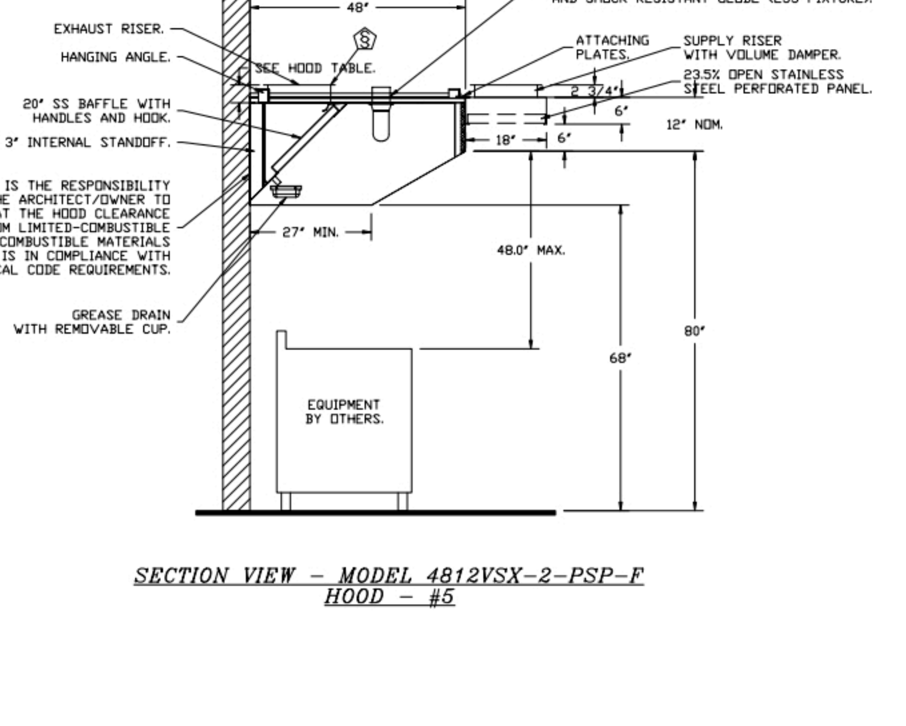

SECTION VIEW – MODEL 4812VSX-2-PSP-F
HOOD – #5

EASY Kitchen Hood
LOCATION , 0
DATE 8/18/2021 JOB # 5038595
DWG # 1 DRAWN BY
REV. SCALE 3/8" = 1'-0"

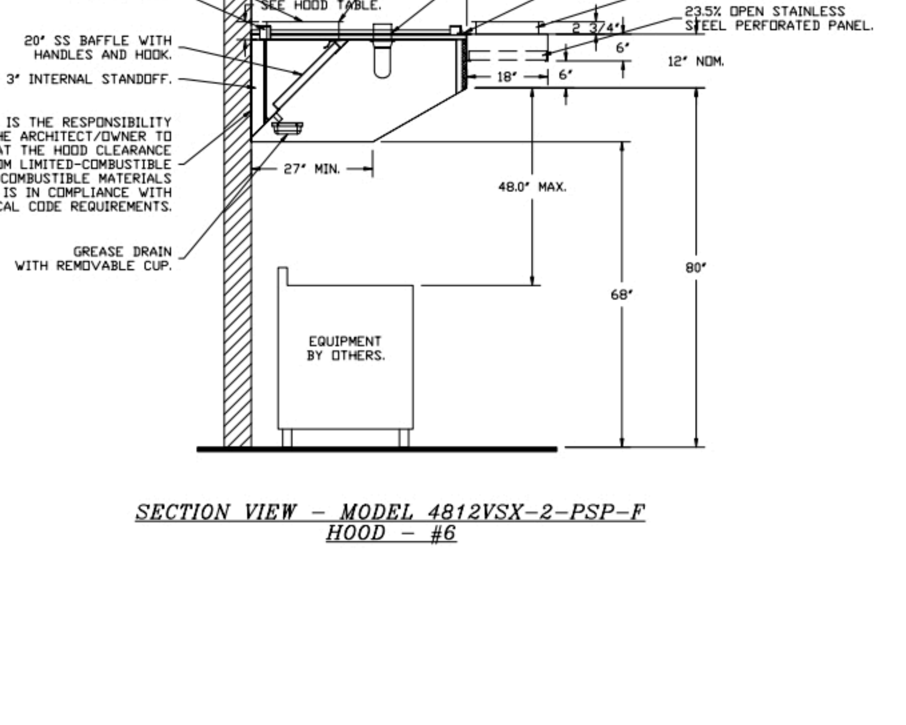

SECTION VIEW – MODEL 4812VSX-2-PSP-F
HOOD – #6

EASY Kitchen Hood
LOCATION , 0
DATE 8/18/2021 JOB # 5038595
DWG # 1 DRAWN BY
REV. SCALE 3/8" = 1'-0"

SECTION 23 38 13 13

SPECIFICATIONS
TAG: Commercial Kitchen Ventilation Hoods, Listed Commercial Kitchen Hoods

PART 1 – GENERAL

1.1 SUMMARY

A. The ND2 series is a Type I, wall canopy hood for use over 600°F cooking surface temperatures. The aerodynamic design includes a mechanical baffle and performance enhancing lip for exceptional capture and containment.

B. The SND-2 series is a Type I, sloped wall canopy hood for use over 600°F cooking surface temperatures. The sloped canopy is the ideal hood choice for low ceiling heights.

C. The hood shall have the size, shape, and performance specified on drawings.

1.2 SUBMITTALS

A. The manufacturer assumes no liability for the use or results of use from this document. Specifications are to be reviewed by the engineer to confirm the project's requirements and meet Federal, State, and Local codes and regulations.

B. As the manufacturer continues product development, it reserves the right to change design and specifications without notice.

C. The manufacturer shall supply complete computer generated submittal drawings, including hood section view(s) and hood plan view(s). These drawings must be available to the engineer, architect, and owner for their use in construction, operation, and maintenance.

1.3 QUALITY ASSURANCE

A. This hood is ETL-listed to standard UL710, ULC710, and ULC-S646 when installed in accordance with these installation instructions and National Fire Protection Association Standard NFPA 96, Standard for Ventilation Control and Fire Protection of Commercial Cooking Operations.

B. Built-in compliance with NSF/ANSI Standard 2.

C. The hood shall be ETL Listed as:

1. Exhaust Hood Without Exhaust Damper.

2. ETL Sanitation Listed and built in accordance with NFPA 96.

3. The ETL label shall list temperature rating(s) and minimum CFM/ft rating(s).

1.4 WARRANTY

A. All units shall be provided with the following standard warranty:

1. This equipment is warranted to be free from defects in materials and workmanship, under normal use and service, for a period of 2-years from date of shipment.

B. The manufacturer shall not be liable for incidental and consequential losses and damages potentially attributable to malfunctioning equipment. Should any part of the equipment prove to be defective in material or workmanship within the 2-year warranty period, upon examination by the manufacturer, such part will be repaired or replaced by manufacturer at no charge. The buyer shall pay all labor costs incurred in connection with such repair or replacement. Equipment shall not be returned without manufacturer's prior authorization, and all returned equipment shall be shipped by the buyer, freight prepaid to a destination determined by the manufacturer.

C. Refer to Manufacturers Operation, Installation, and Maintenance (OIM) Manual for detailed descriptions of what is/is not covered and contact information for warranty claims.

PART 2 – PRODUCTS

2.1 GENERAL

A. Construction shall be dependent on the structural application to minimize distortion and other defects. All seams, joints, and penetrations of the hood enclosure to the lower outermost perimeter, which directs and captures grease-laden vapor and exhaust gases, shall have a liquid-tight continuous external weld in accordance with NFPA 96.

B. Duct sizes, CFM, and static pressure requirements shall be as shown on drawings. Static pressure requirements shall be precise and accurate; air velocity and volume information shall be accurate within 1-ft increments along the length of the ventilator.

2.2 CONSTRUCTION

A. Construction shall be type 430 stainless steel.

B. Double wall insulated front to eliminate condensation and increase rigidity on wide sizes. The insulation shall have a flexural modulus of 475 EI, meet UL 181 requirements and be in accordance with NFPA 90A and 90B.

C. Hood shall be equipped with a minimum of four connections for hanger rods. Hood lengths greater than 12' will have added hangers.

D. Exhaust duct collar to be 4" high with flange.

E. The grease drain system shall be an enclosed integral part of the hood back and have slopes with an exposed, removable 1/2 grease cup to facilitate cleaning.

F. An integral baffle to direct grease laden vapors toward the exhaust filter bank.

G. Hood shall be furnished with UL classified filters, supplied in size and quantity as required by ventilator.

H. All seams shall be welded and have stainless steel on exposed surfaces.

2.3 LIGHTING

A. L55 Series canopy light fixture, includes clear thermal and shock resistant globe.

2.4 FILTERS

A. Kleen-Gard Stainless Steel Baffle Filter with Handles and Botton Hanging Hook, UL Classified.

2.5 OPTIONS

A. Optional perforated supply plenum shall provide make-up air discharged below the cooking equipment.

1. Perforated diffuser plates shall be included in the design to provide even air distribution.

2. Unexposed surfaces shall be constructed of aluminized steel. Plenum shall be insulated to prevent condensation.

3. Perforated Supply Plenum (PSP)

PART 3 – EXECUTION

3.1 EXAMINATION

A. Examine areas and conditions under which the system is installed. Do not proceed with work until unsatisfactory conditions have been corrected in a manner acceptable to Installer.

3.2 INSTALLATION

A. Install in accordance with manufacturer's instructions, drawings, written specifications, manufacturer's installation manual, and all applicable building codes.

EASY Kitchen Hood
LOCATION , 0
DATE 8/18/2021 JOB # 5038595
DWG # 1 DRAWN BY
REV. SCALE 3/8" = 1'-0"